Printed with PDF Extra

REV 更改号	DATE 日期	REVISION DETAILS 更改内容	APPD 审核并批准
A	Dec.3,2022	Production issue	

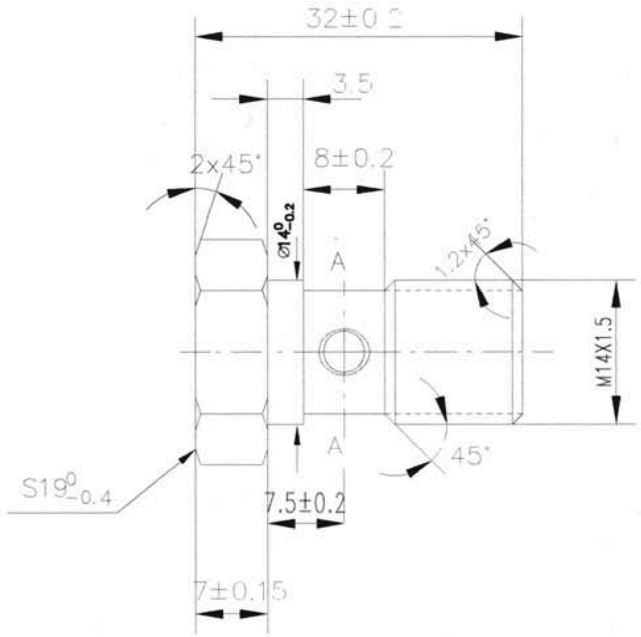

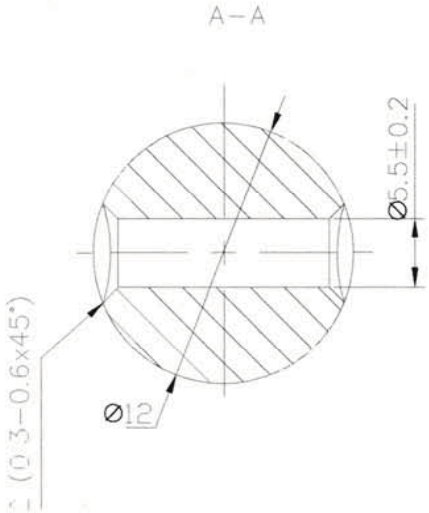

UNLESS SPECIFIED
ALL DIMENSIONS ARE IN mm,
ROUGHNESS ON
HEXAGON SURFACE ,
INNER SURFACE OF THE BORE IS
BETWEEN Ra6.2 um AND Ra12.5um,
OTHER MACHINED SURFACE IS Ra3.2μm,
ANGLES TOLERANCE ±5°,
DIMENSIONS TOLERANCE ±0.25mm,
REMOVE ALL BURRS,SLIVERS AND SWARF,
BREAK ALL SHARP EDGES R<0.5mm.

其它事项，
图示尺寸单位为mm,
六角面粗糙度 ,
内孔表面粗糙度Ra6.2-Ra12.5,
其它未注机加工表面粗糙度 Ra=3.2μm,
未注角度公差 ±5°,
未注尺寸公差 ±0.25mm
去除所有毛刺及金属切屑，
锐边倒钝R<0.5mm.

		Zhejiang Gaocheng Autoparts Co.,Ltd	
THIRD ANGLE PROJECTION		PART No 零件名	41686-M14 BANJO
MATERIAL	Chinese Stainless steel 0Cr17Ni12Mo2 or 06Cr17Ni12Mo2 that is near to AISI 316 材料：国产316不锈钢，即0Cr17Ni12Mo2（GB/T1220-1992）或 06Cr17Ni12Mo2（GB/T1220-2007）	SCALE: NTS	APPD: 批准 / DRN: 制图 林吉云
FINISH	Bare stainless steel. Remove all sharp edges,burrs,slivers and swarf, break all edges 光身，去除所有毛刺，铁屑等残留物，锐边倒钝.		DATE: 日期 / CHK: 审核 郑建辉